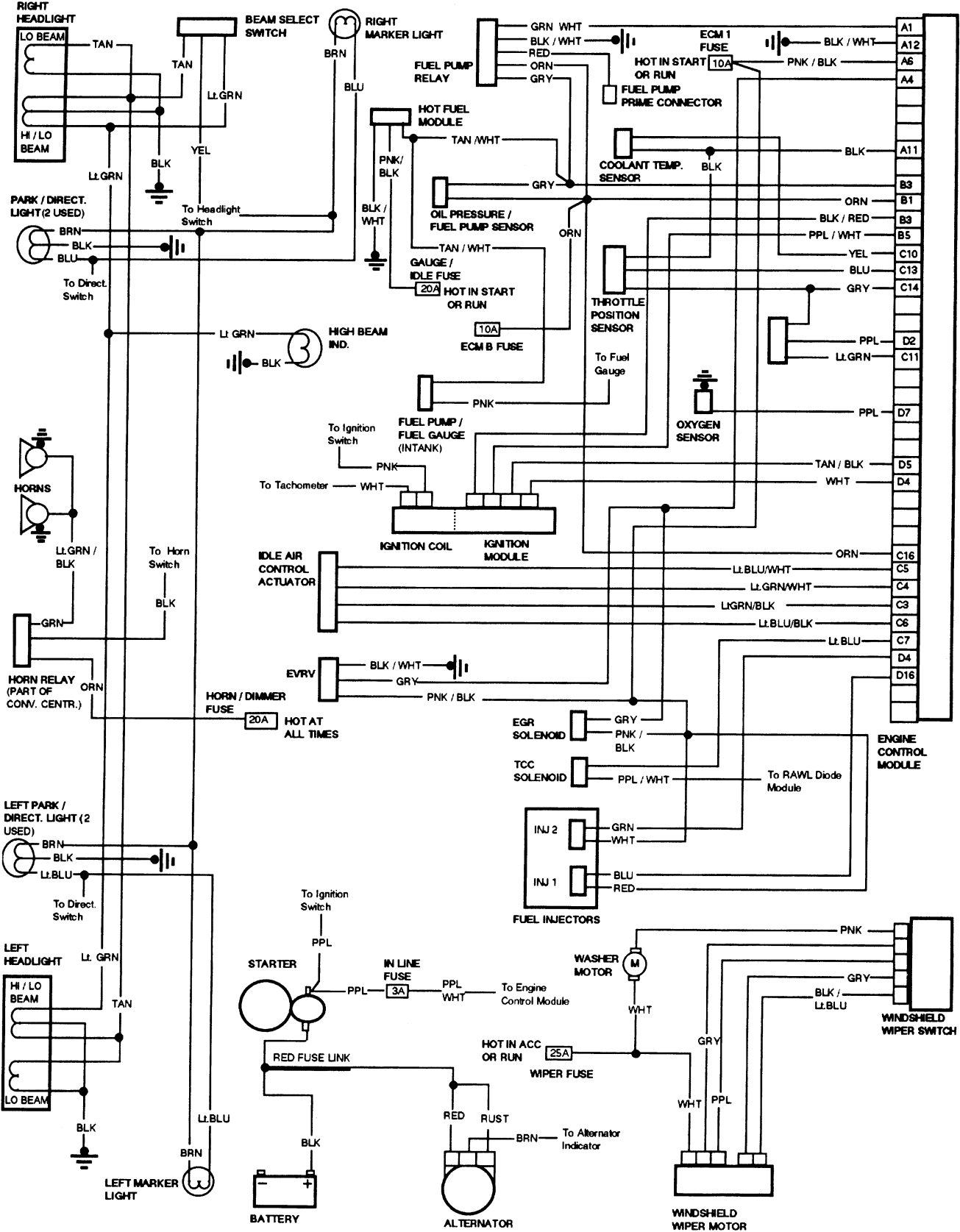
RIGHT HEADLIGHT
LO BEAM
HI / LO BEAM
TAN
BEAM SELECT SWITCH
RIGHT MARKER LIGHT
BRN
BLU
Lt.GRN
YEL
BLK
PARK / DIRECT. LIGHT (2 USED)
BRN
BLK
BLU
To Headlight Switch
To Direct. Switch
FUEL PUMP RELAY
GRN WHT
BLK / WHT
RED
ORN
GRY
ECM 1 FUSE
HOT IN START OR RUN
10A
PNK / BLK
FUEL PUMP PRIME CONNECTOR
HOT FUEL MODULE
TAN /WHT
PNK/ BLK
BLK / WHT
COOLANT TEMP. SENSOR
OIL PRESSURE / FUEL PUMP SENSOR
ORN
TAN / WHT
GAUGE / IDLE FUSE
20A
HOT IN START OR RUN
10A
ECM B FUSE
THROTTLE POSITION SENSOR
HIGH BEAM IND.
To Fuel Gauge
FUEL PUMP / FUEL GAUGE (INTANK)
PNK
OXYGEN SENSOR
To Ignition Switch
To Tachometer
WHT
IGNITION COIL
IGNITION MODULE
HORNS
Lt.GRN / BLK
To Horn Switch
IDLE AIR CONTROL ACTUATOR
Lt.BLU/WHT
Lt.GRN/WHT
Lt.GRN/BLK
Lt.BLU/BLK
Lt.BLU
HORN RELAY (PART OF CONV. CENTR.)
EVRV
HORN / DIMMER FUSE
20A
HOT AT ALL TIMES
EGR SOLENOID
TCC SOLENOID
To RAWL Diode Module
ENGINE CONTROL MODULE
A1
A12
A6
A4
A11
B3
B1
B3
B5
C10
C13
C14
D2
C11
D7
D5
D4
C16
C5
C4
C3
C6
C7
D4
D16
LEFT PARK / DIRECT. LIGHT (2 USED)
BRN
BLK
Lt.BLU
To Direct. Switch
INJ 2
INJ 1
GRN
WHT
BLU
RED
FUEL INJECTORS
To Ignition Switch
PPL
STARTER
IN LINE FUSE
3A
PPL WHT
To Engine Control Module
WASHER MOTOR
M
WHT
PNK
GRY
BLK / Lt.BLU
WINDSHIELD WIPER SWITCH
LEFT HEADLIGHT
HI / LO BEAM
LO BEAM
Lt. GRN
TAN
BLK
Lt.BLU
BRN
LEFT MARKER LIGHT
RED FUSE LINK
HOT IN ACC OR RUN
25A
WIPER FUSE
RED
RUST
BRN
To Alternator Indicator
BATTERY
ALTERNATOR
WHT
PPL
WINDSHIELD WIPER MOTOR